# Data Sheet

Article number: 201461B302SW
Description: E+G Flanged linear actuator
GN146.1-B30-2-SW

## Measures

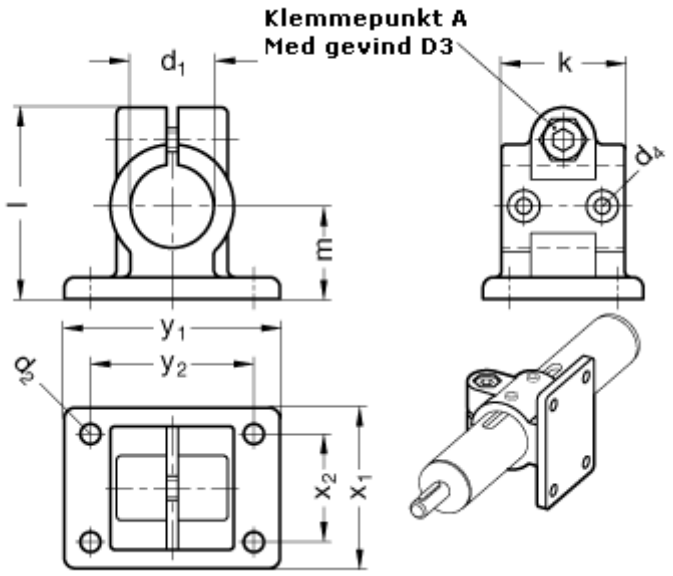


| | |
|---|---|
| d1 = B30 | x2 = 35 |
| d2 = 6,5 | y1 = 70 |
| d3 = M 8 | y2 = 53 |
| d4 = M 4 | |
| k = 40 | |
| l = 62 | |
| m = 30 | |
| x1 = 52 | |

*Product drawings and brochures of any kind may contain errors for which Brd. Klee A/S cannot be liable.*